MEGAPIXEL LENS

computar

IR CORRECTED 3 MEGA-PIXEL LENS

3.1~8mm MANUAL-IRIS

• F1.2 • 1/2.7in • CS Mount

KEY FEATURES

- 1/2.7" Format
- 3 Megapixel
- 3.1-8mm Varifocal
- Full HD Format
- Manual Iris
- Precise Focus Adjustment
- IR Corrected Optics
- Corner Brightness

LM MPCP0308-3MPIR	
Application	1/2.7" format camera
Focal Length	3.1 - 8mm
Aperture	F1.4 - 360C
Angle of View	(D) 123.1° - 48.3°
	(H) 105.4° - 42.2°
	(V) 57.9° - 23.8°
Object Distance	0.3m - INF
Filter Size	-
Mount	CS - Mount
Operating Temp.	-10°C~ + 50°C
Dimensions	∅40mm x 55mm

DIMENSIONS

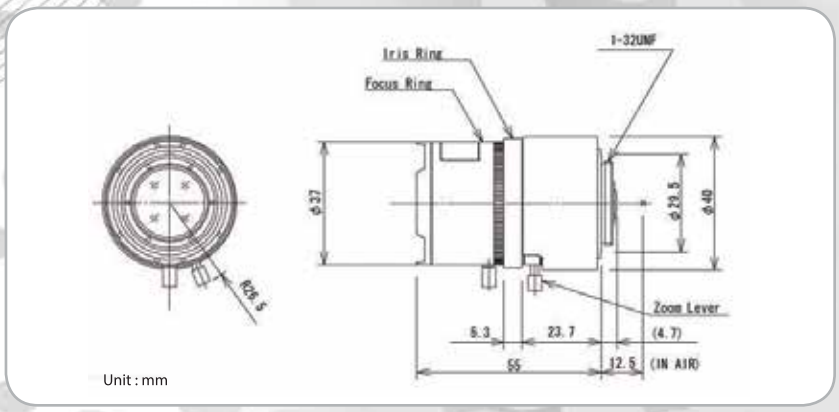

Specifications may change without a prior notice. All the images on the page are for illustrative purpose only. They may not representing actual products. All the rights for the registered trademarks are reserved for their respectable owners. Not responsible for any typographical errors.